Main technical indicators(主要技术指标)	
1.Mating (插拔次数)	5000
2.Working Temperature (温度)	-55～+150 ℃
3.IP Rating (防护级别)	IP 50
4.Diameter of socket end(插合端直径)	ϕ0.9
5.Testing Voltage (测试电压)	1450V
6.Working Voltage (工作电压)	1300V
7.Rated Current (额定电流)	8A
8.Shell material(壳体材质)	Brass (chromium plating) shell and chuck nut/(nickel plating) pin sleeve and middleware/黄铜（镀铬）外壳和夹头螺母/(镀镍)插销套和中间件
9.Pin Material(插针材料)	Copper alloy gold plating(铜合金镀金)
10.Insulator material(绝缘体材质)	PPS

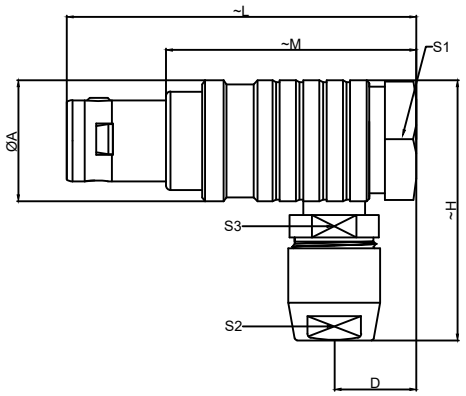

	A	D	H	L	M	S1	S2	S3
MM	16.5	9	34	41.5	29.5	14	12	13
in	0.6496	0.3543	1.3386	1.6339	1.1615	0.5512	0.4725	0.5118

Sum up(总结)	
Series(系列）	B
Shell style/model（外壳样式/型号）	THG: Elbow plug, cable collet/电缆夹头弯头
Button（按键）	A button(一个按键)
Termination type（终止类型）	Male solder(公焊锡)
Line diameter awg(线材直径)	30-22AWG
Cable diameterϕ（电缆直径）	ϕ3.3-4.2MM
Matching parts(配件)	ZGG.2B.P10.CLL

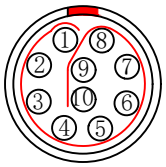

Welded surface
(焊接面)

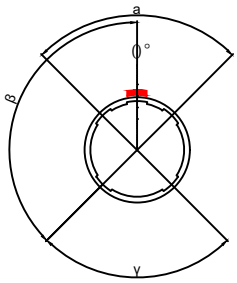

Positive view
(正视图)

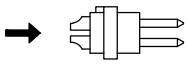

Solder core
(焊接型公胶芯)

Location pin combination(定位销组合)			
(编号) Numder	Number of positioning pins(定位销数量)	Angle(角度)	Series(系列)--2B
G	One(1)		(Zero degrees)0°
A	Two(2)	A	Thirty degrees(30°)
B	Two(2)		Forty-five degrees(45°)
C	Two(2)		Sixty degrees(60°)
D	Two(2)	γ	95 degrees（95°）
E	Two(2)	β	120 degrees(120°)
F	Two(2)		145 degrees(145°)
J	Two(2)	A	37.5degrees(37.5°)
K	Two(2)		52.5degrees(52.5°)
L	Two(2)	γ	Seventy degrees(70°)

	A	B	C√	ANGLE	
5-10	±0.02	±0.05	±0.1	0°-30°	±0.1°
50-100	±0.1	±0.15	±0.2	61°-90°	±0.5°
50-100	±0.15	±0.2	±0.25		
100-	±0.15%	±0.20%	±0.25%		

TH G. 2B. P10.C L A D 42

- Model(型号)
- Positioning pin(定位销)
- Series(系列）
- Needle core configuration(针芯配置)
- Outer casing(外壳)
- Insulator(绝缘体)
- Needle core(针芯)
- Type of clamp(线夹类型)
- Cable diameter(电缆直径)

DESIGNED(设计)		DATE(日期)		SCALE(比额)	N/A(不适用)	MODEL TYPE 型号类型: THG.2B.P10.CLAD.42
CHECKED(校对)		DATE(日期)		VIEW(视图)		PART NO. 名称: 2B10-core plug 2B10芯插头
APPROVED(审核)		DATE(日期)		UNIT(单位)	MM	DWG NO.:
REVISIONS				MATERIAL（材料）		
www.helloxkb.com www.helloxkb.cn		XKB INDUSTRIAL PRECISION CO.,LIMITED				WEIGHT(重量) / SHEET(表) 1/1 / REVISION(修订) A0